LED Indoor
VT.ST1.X



*Guarda opcional

IP20

CONSTRUCTION

Constructed of a metal housing with a polycarbonate shield and decorative plastic end caps. The white polycarbonate lens provides even illumination on surfaces where tasks are perfomed. Is designed for suspended installation via mounting chains or direct to ceiling.



FEATURES

HOUSING

Steel white painted construction.

Opal diffuser.

OTHERS

3000 / 4000 / 5000 K.

0 - 10V Dimmable.

SPECIFICATION

Model No.	VT.ST1.X
System watts	25/30/40W
Lumen Output	3250/3900/5200
Color	Switchable 3K= 3000K | 4K= 4000K | 5K= 5000K
Option	Dimmable 0-10V
Input Voltage	120~277V
Option	WG= Wire Gard
Starting Temp	-40°C
Equivalent	2*32W FL

**Consult for availibility, delivery will be affected.

Indoor

DIMENSIONS

CCT CHANGING

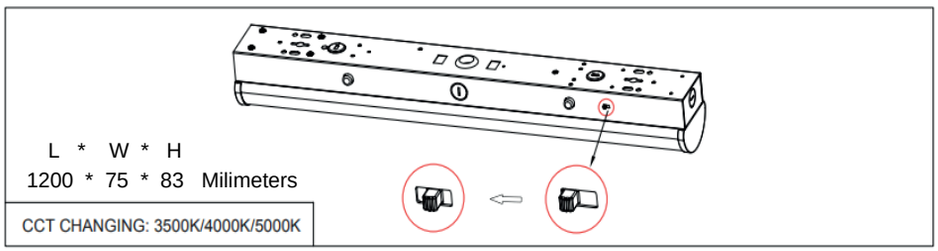

LINE DRAWING

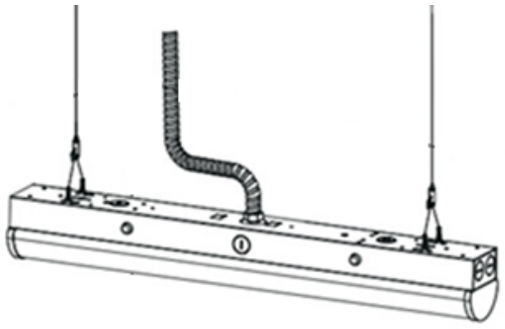

LEDxperience® a Villar Trade LLC Brand | www.ledxperienceusa.com | contact.ledx@ledxperienceusa.com | 2001 Ramrod Ave Apt 1511
Henderson | NV | 89014 | USA | +1 702.917.7894