LED High Bay

VT.HBF Series

Specifications



High Bay

APPLICATIONS

	Retails & Supermarkets
	Hotels & Restaurants
	Commercial Buildings
	Offices And Showrooms
	Schools & Colleges

Wattage Selectable

Dimmable

LEDxperience® a Villar Trade LLC Brand | www.ledxperienceusa.com | contact.ledx@ledxperienceusa.com | 2001 Ramrod Ave. Apt. 1511 204 | Henderson | NV | 89014 | USA | +1 702.917.7894

LED High Bay
VT.HBF Series

Specifications

Emergency system test switch (included with optional EM backup)

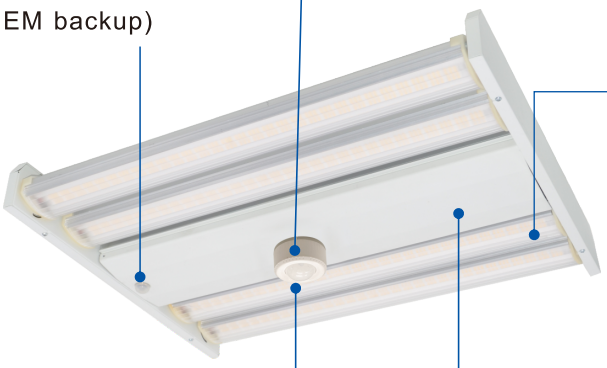



Easy access for 3-level wattage tuning

Diffuse lens with high optical efficiency (90%) allow for high efficacy while providing wide coverage and uniformity for any application



Easy access to all the sensor controls



Tool-less entry simplifies the installation process



Outer light bars are 180° adjustable for applications requireing up-light capability

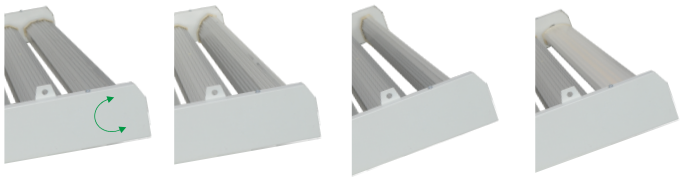



50×90 optics

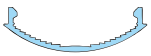

90°optics



120°optics

High Bay





V-Hook



Pendant



Aircraft Cable



Optional occupancy external sensor

Wattage Selectable

LEDxperience® a Villar Trade LLC Brand | www.ledxperienceusa.com | contact.ledx@ledxperienceusa.com | 2001 Ramrod Ave. Apt. 1511 204 | Henderson | NV | 89014 | USA | +1 702.917.7894

LED High Bay
VT.HBF Series

Specifications

Product Description:

The new VT.HBF Serie by LEDxperienceUSA.com, low profile with high quality optics to produce a sleek and subtle aesthetic that meets most office ceiling applications. With its tool-less easy access wiring compartment, this fixture simplifies the installation process. Ideal for office spaces, supermarkets, and meeting rooms.

Features:

LISTING

▶UL and CUL listed

HOUSING

▶Housing made of high quality aluminum with high reflectance paint to provide high lumen output.

AMBIENT TEMPERATURE

▶Suitable for use in -40℃ to +50℃

EFFICACY

▶Up to 165 lumens per watt (see individual wattage data)

OPTICS

▶Diffuse lens provides superior uniformity

ELECTRICAL

▶Standard universal 120-277VAC input

▶4KV Surge protector per ANSI/IEEE C62.41

▶Standard 0-10VDC dimming driver

FINISHES

▶Polyester powder coat white finish, multi-stage process produces 3mil thickness for superior corrosion and maximum environmental durability.

Model No.



VT.HBF2 2Ft



VT.HBF4 2Ft



VT.HBF2 4Ft



VT.HBF4 4Ft

High Bay

Specification:

Example: VT.HBF4.4FT.450.UNV.8.40K.MS.WH.EM

Model No.	Nominal Watts**	Input Voltage	CRI	Color Temp*	Sensor	Finish	Option
VT.HBF2.2FT.100	100=100W	**UNV**=120-277VAC	**8=**80+	**30**=3000 K	**BLANK**=No Sensor	**WH**=White	**EM**=(Emergency Battery Back Up)
VT.HBF2.2FT.180	180=180W	**HV4**=347/480VAC		**40**= 4000 K	**MS**=Microwave Sensor		
VT.HBF4.2FT.220	220=220W			**50**=5000 K			
VT.HBF4.2FT.290	290=290W						
VT.HBF2.4FT.220	220=220W						
VT.HBF2.4FT.290	290=290W						
VT.HBF2.4FT.450	450=450W						

* Different LED Kelvin temperature available with 4-6 week lead time. Please call for a quote.

** DISCLAIMER: This test report was produced in accordance with IES LM-79 photometric testing protocol for luminaires, using a single representative test fixture. Actual production units may vary from the values reported here by up to ±10%.

LED High Bay

VT.HBF Series

Specifications

Performance Data

Model NO.	Nominal Watts**	Dist. Type	Lumen*	Efficacy*	B	U	G
VT.HBF2.2FT.100	100=100W	Type V	16198/14254/12148 lm	158 lm/W	4	3	3
VT.HBF2.2FT.180	180=180W	Type V	24568/21620/18426 lm	157 lm/W	4	3	3
VT.HBF4.2FT.220	220=220W	Type V	36000/32000/27000 lm	158 lm/W	4	3	3
VT.HBF4.2FT.290	290=290W	Type V	45000/39600/33750 lm	158 lm/W	4	3	3
VT.HBF2.4FT.220	220=220W	Type V	36000/32000/27000 lm	158 lm/W	4	3	3
VT.HBF2.4FT.290	290=290W	Type V	45000/39600/33750 lm	158 lm/W	4	3	3
VT.HBF2.4FT.450	450=450W	Type V	58000/51000/43500 lm	158 lm/W	4	3	3
* Lumen and Efficacy are based on 4000K							

Dimension:

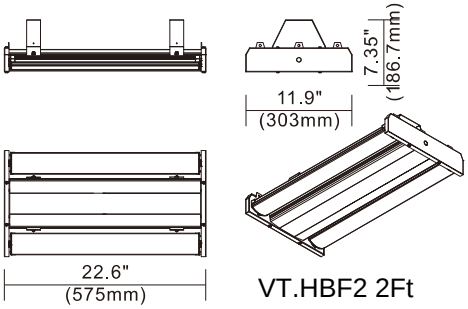

VT.HBF2 2Ft

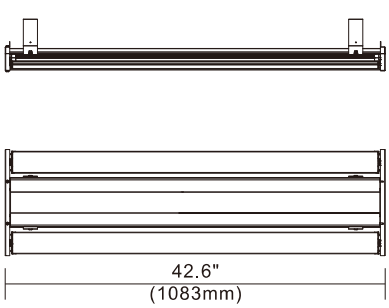

VT.HBF2 4Ft

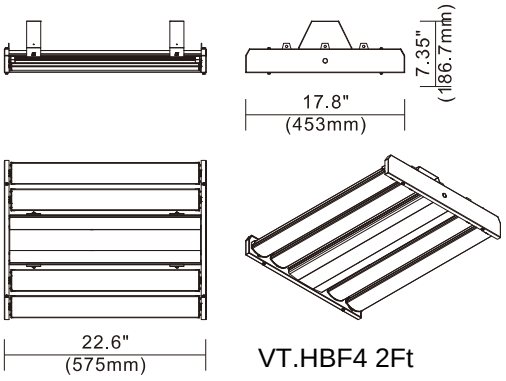

VT.HBF4 2Ft

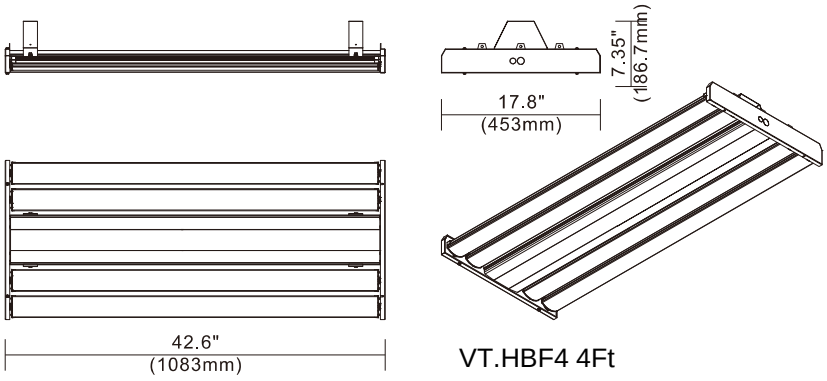

VT.HBF4 4Ft

High Bay